	PLS6.75	PLS6.150D
Work Surface Area	32" x 18" (813mm x 457 mm)	32" x 18" (813mm x 457 mm)
Maximum Part Size	37" x 23" x 9" (940mm x 584 mm x 229mm)	37" x 23" x 9" (940mm x 584 mm x 229mm)
Dimensions	44" x 39" x 36" (1118mm x 991 mm x 914mm)	44" x 39" x 36" (1118mm x 991 mm x 914mm)
Rotary Capacity	Max Diameter 8" (203mm)	
Motorized Z Axis lifting Capacity	40 lbs. (18 kg.)	
Available Focus Lenses	1.5" (38mm) 2.0" (51mm) (standard) 2.5" (64mm) 4.0" (102mm)	
Laser Platform Interface Panel	Keypad and LCD display shows current file name, Laser power, engraving speed, PPI and run time	
Operating System Compatibility	Requires a connected PC compatible with Windows XP/Vista/7 32-bit or 64-bit	
PC Connection	USB 2.0	
Cabinet Style	Floor-Standing	
Optics Protection	Air Assist Optional	
Laser Options	10, 25, 30,40, 50, 60, 75 Watts	10, 25, 30, 40, 50, 60, 75 Watts Equipped for dual lasers
Approximate Weight	325 lbs. (147 kg.)	345 lbs. (156 kg.)
Power Requirements	110V/10A; 220V-240V/5A	220V-240V/15A
Exhaust Connection	Two 4" (102 mm) ports 500 CFM @ 6" static pressure ($850m^3$/hr @ 1.5 kPa)	

System Features

- Laminated Safety Glass
- Over-temp Alarm (for fire safety)
- Precision Digital Motors
- LCD Display
- Top & Front Door
- Multiple Language Support
- Permanently Sealed Bearings
- Stretch-Free Kevlar Belts

Laser Features

- Laser Fan Control (to reduce noise)
- Wide Selection of Power Levels
- Air-Cooled Laser Cartidge
- Patented Permalign
- No Optical Beam Alignment Required
- Patented Cross-Platform Compatibility
- Patented Free-Space Gas Slab Laser Design
- High Reliability, Excellent Power Stability

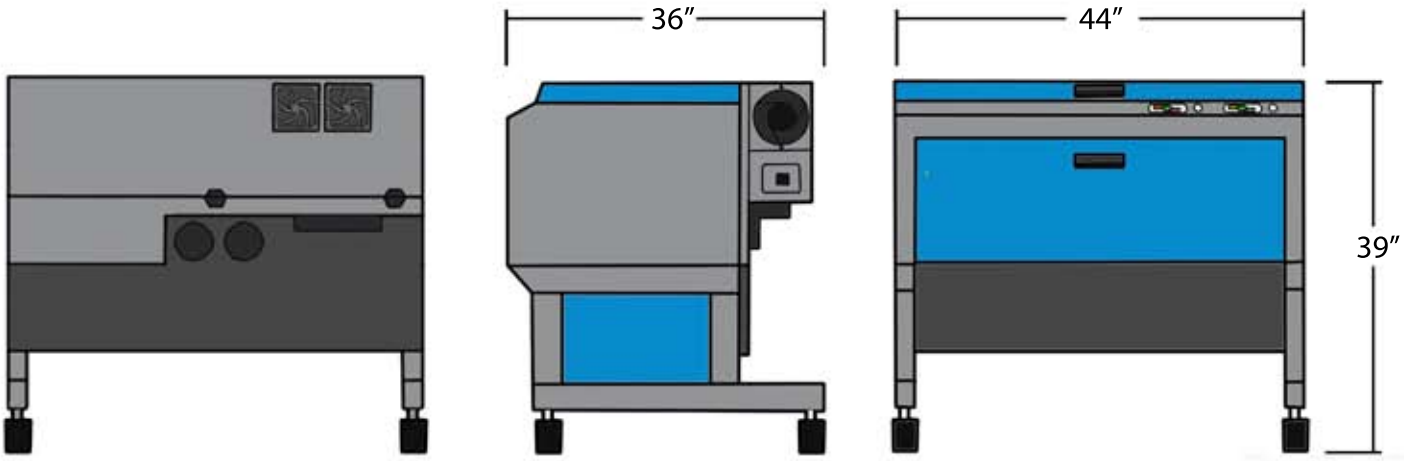

REAR RIGHT FRONT